DRILLING

MUD LINE GATE VALVES

+1 713-351-7900

f-e-t.com/drilling

ForumDP.Sales@f-e-t.com

MUD LINE GATE VALVES

Introduction

Mud Line Gate Valves conform to API Flange dimensions and pressure ratings. They are designed for dependable service in high pressure systems and in pump and standpipe manifold systems. The seats are designed to provide a positive, tight shut off every closing cycle, even after long exposure to abrasion and scoring. Twin metal wear inserts, encapsulated in an elastomer, form a cylindrically shaped plug made up of a gate slot and two flowports. Once closed, line pressure forces the gate up against the downstream port seals which are tested up to 7,500 psi. The 4 in. 5000 Working Pressure (WP) thru 5 x 4 in. 7500 WP valve has a transparent stem cover which protects and reveals gate open/close position. Stem packing is self-adjusting on all sizes.

2 inch Screwed End
2000-5000 WP

5-1/8 inch Flanged End
7500 WP

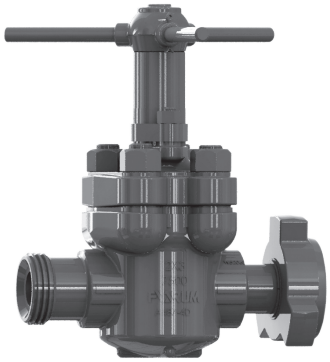

Hammer Union End
7500 WP

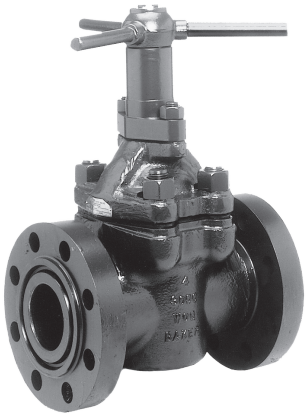

3 inch Flanged End
2000-5000 WP

3 inch Weld End
2000-5000 WP

GENERAL INFORMATION

General Application

- Water, oil, and gas lines
- Wellheads
- Pipelines and manifolds
- Abrasive drilling mud
- Sour gas and crude oil
- Up to 7,500 psi and temperature range of -40°F to 400°F

Standard Trim Includes

- A-487 Steel Body and Bonnet
- Stainless Steel (SS) Stem and Gate
- Steel Buna-N Seats
- 90 Durometer A Buna-N Seals

Sizes

- Full Port - 2 in., 3 in., 4 in., 4-1/16 in., and 5-1/8 in.
- Regular Port - 5 x 4 in., 6 x 4 in., and 6 x 5 in.

Material Traceability*

* Certification provided upon request at additional charge.

- DNV
- Lloyd's of London Type Approval
- PSL 1 and 2

Connections

- Screwed End
- Weld End
- Ring Type Joint (RTJ), Flanged End
- Integral Hammer Union

Testing and Pressure Ratings

All Mud Gate Valves are hydrostatically tested.

Working Pressure (WP)	Shell Test Pressure
3000 WP	4,500 psi Test
5000 WP	7,500 psi Test
7000 WP	11,250 psi Test

DIMENSIONS AND PRESSURE RATINGS 3000 AND 5000 WP

Pressure Rating		3000 WP 6000 PSI Test			5000 WP 10000 PSI Test				
Size		2	3	4 4-1/16	2	3	4 4-1/16	5x4	6x4
		inch	inch	inch	inch	inch	inch	inch	inch
A	Screwed End	9	11	13	9	11	13	13	N/A
	Weld End	9	11	13	9	11	13	13	13
	Flanged End	11-5/8	14-1/8	16-3/8	12-1/8	15-5/8	18	29	N/A
B	(Open)	13	18	21-1/4	13	18	24-5/8	24-5/8	24-5/8
C	(Seat Bore)	2	3	4	2	3	4	4	4
D	(Handle Diameter)	14	19	23	14	19	23	23	23
F	(Flange Diameter)	8-1/2	9-1/2	11-1/2	8-1/2	10-1/2	12-1/4	14-3/4	N/A
	Flange Bolts (Qty)	(8)	(8)	(8)	(8)	(8)	(8)	(8)	N/A
	Size	7/8	7/8	1-1/8	7/8	1-1/8	1-1/4	1-1/2	N/A
	Ring No. (RTJ)	R24	R31	R37	R24	R35	R39	R44	N/A

N/A = Not Available.

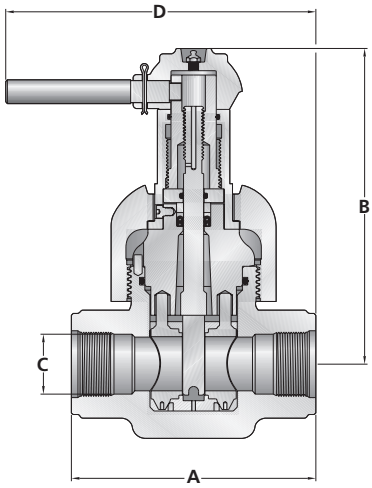

A Screwed-End Body

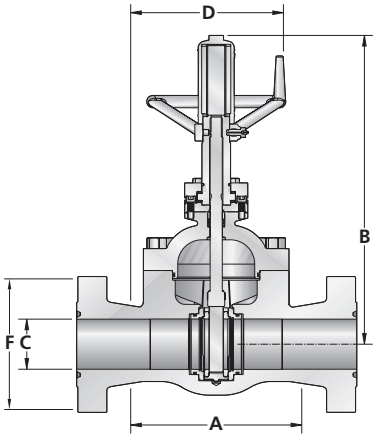

Flanged-End Body

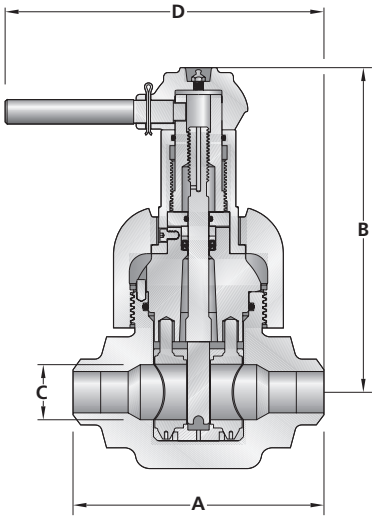

Weld-End Body

Note: These diagrams are for dimensional purposes only. For actual product illustrations, refer to pages 14, 16, and 20.

MATERIALS NUMBER SCHEME

BASE MATERIAL NUMBER
1st to 3rd Digits

Full Port - 930
API 6A ID - 932
Regular Port - 934

SIZE
5th Digit
(2 in. - 1)
(3 in. -3) (4 in., 4-1/16 in. - 4)
(5 x 4 in. - 4), (5-1/8 in., 6 x 4 in. - 5)
(6 x 5-1/8 in. - 8)

GATE/STEM MATERIAL
7th Digit
316 SS/316 SS Stem - 3
316 SS with Tungsten Carbide Coating/316 SS Stem - 4•
17-4 PH/316 SS Stem - 5•
17-4 PH/410 SS Stem - 6•

BODY MATERIAL
9th Digit

No Coating - 0
SPECIAL - X

XXX X X X X X

WORKING PRESSURE
4th Digit
3000 - 5
5000 - 6
7500 - 8

END CONNECTION
6th Digit

Screwed	LP-0, NUE-1, EUE-2, Short/Long Casing Thread-E
Weld:	XXH-4*, SCH 160-5
Flanged:	RTJ-7
Hammer Union:	1002 - N 1502 - P

SEAT MATERIAL
8th Digit

	NBR	Viton®	HSN 85DPC	90D Buna-N•
Steel	B	N/A	N/A	J
316 SS	M	N	Z	N/A
410 SS	N/A	N/A	N/A	P

• 7,500 WP only.
* 7,500 WP is available in SCHXXH only.

Digit	Code 10th Digit Description	Digit	Code 11th Digit Description	Digit	Code 12th Digit Description
0	Not Required	0	Not Required	0	Not Required
6	Q.A and Testing to API 6D only (Same requirements as "D" certified)	1	PSL 1 Requirements	B	I.R.C. - Independent Design Review Certificate
		2	PSL 2 Requirements		
A	Statement of Compliance Hydrostatic Test Report	3	PSL 3 Requirements - with Amendment	N	NACE MR0175 Documentation
		4	PSL 2 Requirements - with PSL 1 Test		
B	Statement of Compliance Mill Certs Hydrostatic Test Report	5	PSL 1 Requirements - with M.P.I.	S	I.R.C. and NACE MR0175 Documentation
		6	PSL 1 Requirements - DYE Penetrant	T	3rd Party Inspection
		7	Standard Testing - PSL 1 Requirements MPI and DYE Penetrant	U	3rd Party Inspection and I.R.C.
C	Statement of Compliance Mill Certs Hydrostatic Test Report Charpy Impacts-Pressure Containing Part	D	Standard Testing - DYE Penetrant	V	3rd Party Inspection and NACE
		M	Standard Testing - Magnetic Particle Inspection (MPI)	W	3rd Party Inspection/I.R.C./NACE MR0175 Documentation
D	Statement of Compliance Mill Certs Hydrostatic Test Report Charpy Impacts-Pressure Containing Part Hydrostatic Test Chart	P	Standard Testing - DYE Penetrant and MPI		
		R	Standard Testing - Radiograph	X	Special
		T	Standard Testing - PSL 2 Requirements MPI, DYE Penetrant and Hardness		

Note: For Non-Standard Assemblies, 7th through 12th digits will be assigned.

MATERIAL NUMBER REPAIR KITS

Size	2	3	2 x 3 3	4	4 5 x 4 6 x 4	4 5 x 4	4-1/16		5-1/8 6 x 5-1/8
	inch	inch	inch	inch	inch	inch	inch	inch	inch
Working Pressure	2-5000 WP		7500 WP	2-3000 WP	5000 WP	7500 WP	3000 WP	5000 WP	7500 WP
Metal Repair Kit, (Standard)	051965410	052090010	051965610	051965310	052092310	051965510	051965310	052092310	052137910
Rubber Repair Kit, (Standard)	051965421	052090021	051965621	051965321	052092321	051965521	052137821	052150621	052137921
Rubber Repair Kit, (H2S)	051965422	052090022	051965622	051965322	052092322	051965522	052137822	052150622	052137922
Major Repair Kit, (Standard)	051965431	052090031	051965631	051965331	052092331	051965531	052136131	052137731	052137931
Major Repair Kit, (H2S)	051965432	052090032	051965632	051965332	052092332	051965532	052136132	052137732	052137932
Minor Repair Kit, (Standard)	051965441	052090041	051965641	052089941	052089941	051965541	052137841	052137841	052137941
Minor Repair Kit, (H2S)	051965442	052090042	051965642	052089942	052089942	051965542	052137842	052137842	052137942

Standard/H2S Service Metal Repair Kit Includes:

2 inch, 2 x 3 inch, 3 inch, 4 inch, and 5 x 4 inch 2-7500 WP

(1) Gate
(1) Stem

5-1/8 inch, and 6 x 5-1/8 inch 7500 WP

(1) Gate
(1) Stem
(2) Wear Ring

Standard/H2S Service Rubber Repair Kit Includes:

2 inch, 2 x 3 inch and 3 inch 2-7500 WP

(1) Stem Screw Seal
(1) Secondary Seal
(1) Stem Seal Assembly
(1) Bonnet Seal
(1) Seat

4 inch, 5 x 4 in. 2-7500 WP, and 6 x 4 in. 5000 WP

(1) Stem Screw Seal
(1) Secondary Seal
(1) Stem Seal Assembly
(1) Bonnet Seal
(1) Seat
(2) Bearing (5,000 and 7,500 psi only)

5-1/8 inch and 6 x 5-1/8 inch 7500 WP

(1) Seat
(2) Seat Seal
(1) Bonnet Seal
(1) Stem Seal Assembly
(1) Packing Retainer Seal
(1) Bonnet Cap Seal
(1) Locking Cap Screw Seal

Major Standard/H2S Service Repair Kit Includes:

2 inch, 2 x 3 inch, and 3 inch 2-7500 WP

(1) Gate
(1) Stem
(1) Seat
(1) Bonnet Seal
(1) Secondary Seal
(1) Stem Screw Seal
(1) Stem Seal Assembly

4 inch, 5 x 4 inch, 6 x 4 inch 2-5000 WP, and 4 inch, 5 x 4 inch 7500 WP

(1) Gate
(1) Stem
(1) Seat
(1) Bonnet Seal
(1) Secondary Seal
(1) Stem Screw Seal
(1) Stem Seal Assembly
(2) Bearing (5,000 and 7,500 psi only)
(1) Key

5-1/8 inch and 6 x 5-1/8 inch 7500 WP

(2) Wear Ring
(1) Gate
(1) Stem
(1) Seat
(2) Seat Seal
(1) Bonnet Seal
(1) Stem Seal Assembly
(1) Packing Retainer Seal
(1) Bonnet Cap Seal
(1) Locking Cap Screw Seal

Minor Standard/H2S Service Repair Kit Includes:

All Sizes

(1) Bonnet Seal
(1) Seat
(1) Gate

PARTS AND WEIGHTS

2 inch - 3000 and 5000 WP

Item No.	Description			2 inch 3000 WP	2 inch 5000 WP
1	Lube Fitting Steel			WWW00C000 (0.1 lb)	
2	Hub Assembly Steel			051888000 (5 lb)	
3	Pin, Lock Handle Steel			WWLC16204 (0.1 lb)	
4	Lock Handle Steel			051888400 (2 lb)	
5	Coupling WCB Steel			051888809 (10 lb)	
6	Stem Screw Seal	70 D Buna-N	H30	WWB224XXX (0.5 lb)	
		75 D Viton®	V35		
7	Screw Housing Steel			051882500 (4 lb)	
8	Lock Screw Steel			WWG11B080 (0.1 lb)	
9	Stem Screw Steel			051882400 (2 lb)	
10	Secondary Seal	90 D Buna-N	H30	WWB210XXX (0.2 lb)	
	Buna-N	90 D Viton®	V40		
11	Retainer Steel			051882600 (0.5 lb)	
12	Stem Seal Assembly			105312722 (0.2 lb)	
13	Bonnet (AISI 1029 Steel)	None	9	05188892X (8 lb)	
14	Stem 316 SS			051816008 (1.5 lb)	
15	Gate 316 SS			051815908 (2.3 lb)	
16	Seat			0518204XX (1.5 lb) (1.5 lb) (1.5 lb) (1.5 lb) (1.5 lb)	
	Steel	70 D Buna-N	21		
	316 SS	70 D Buna-N	81		
		90 D Viton®	82		
		90 DPC	86		
17	Bonnet Seal			WWB342XXX (0.1 lb) (0.1 lb) (0.1 lb)	
		90 D Buna-N	H40		
		90 D Viton®	V40		
		90 DPC	P41		
18	Index Pin Steel			WWLA1B0S4 (0.1 lb)	
19	Body	Uncoated Steel		051884709 (27 lb)	
	Screwed End	LP			
		EUE		051885809 (26 lb)	
	Flanged End	RTJ		051887420 (67 lb)	051887739 (79 lb)
	Weld End			O/A	
		SCH 80	1		
		SCH XXH	2		
		SCH 160	5		
	Grooved End	SCH 80		N/A	
	Body Coatings Change last digit to:			–	
		None	9		
		Baker 10	6		
		Baker 11	7		
		Baker 12	8		

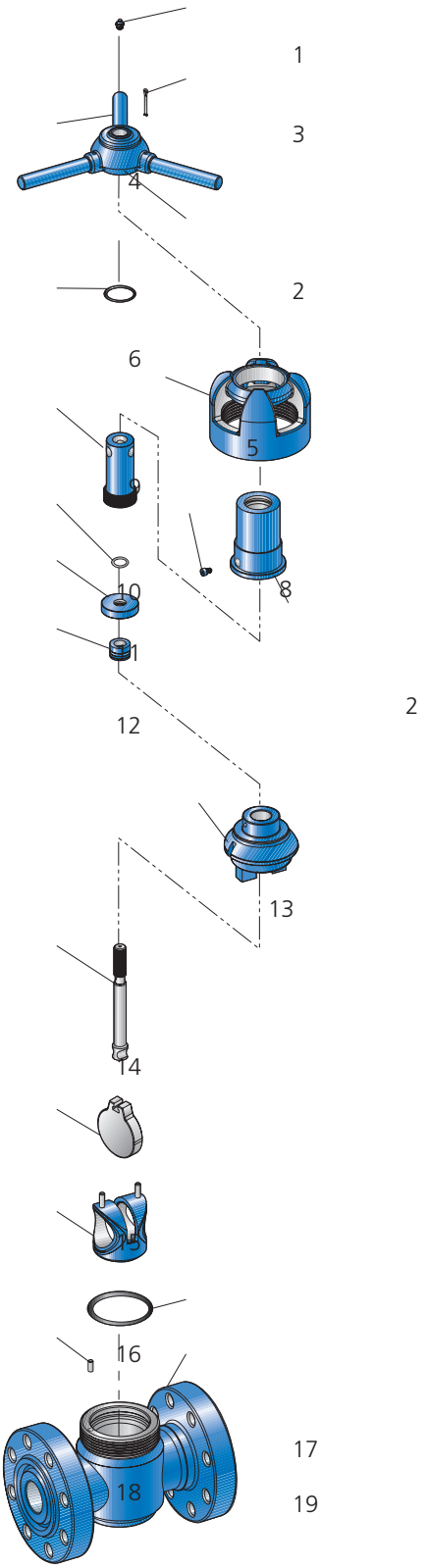

O/A = On Application.

PARTS AND WEIGHTS

3 inch, 4 inch and 4-1/16 inch - 3000 WP

Item No.	Description			3 inch	4 inch	4-1/16 inch
				3000 WP		
1	Lube Fitting, Steel			WWW00C000 (0.1 lb)		
2	Hub Assembly Steel			051888100 (7.5 lb)	051888200 (7.5 lb)	
3	Pin, Lock Handle, Steel			WWLC16204 (0.1 lb)		
4	Lock Handle Steel			051888500 (2 lb)	051888600 (2.5 lb)	
6	Stem Screw Seal	70 D Buna-N	H30	WWB226XXX (0.1 lb)	WWB227XXX (0.1 lb)	
		75 D Viton®	V40			
7	Screw Housing Steel			051884000 (5 lb)	051883300 (7 lb)	
9	Stem Screw Steel			051883900 (3 lb)	051883100 (4 lb)	
10	Secondary Seal	90 D Buna-N	H30	WWB212XXX (0.2 lb)	WWB214XXX (0.2 lb)	
		90 D Viton®	H40			
11	Retainer Steel			051883800 (0.5 lb)	051882700 (0.5 lb)	
12	Stem Seal Assembly			105312732 (0.5 lb)	105312742 (0.5 lb)	
13	Bonnet (A-487 Steel)			051889239 (29 lb)	051889339 (37 lb)	052092120 (37 lb)
14	Stem 316 SS-08	303SS-02		051818708 (2 lb)	051820708 (2 lb)	051820702 (2 lb)
15	Gate 316 SS			051818808 (5 lb)	051820108 (9 lb)	
16	Seat Steel	70 D Buna-N	21	0518206XX (6 lb)	0518205XX (8 lb)	0520925XX (8 lb)
	316 SS	70 D Buna-N	81	(6 lb)	(8 lb)	(8 lb)
		90 D Viton®	82	(6 lb)	(8 lb)	(8 lb)
		90 DPC	86	(6 lb)	(8 lb)	(8 lb)
17	Bonnet Seal	90 D Buna-N	H40	WWB433XXX (0.2 lb)	WWB439XXX (0.2 lb)	
		90 D Viton®	V40	(0.2 lb)	(0.2 lb)	
		90 DPC	P41	(0.2 lb)	(0.2 lb)	
19	Body Screwed End	Uncoated Steel LP		051884539 (70 lb)	051884639 (80 lb)	N/A N/A
		NUE		051885239 (70 lb)	051885339 (80 lb)	N/A N/A
		EUE		051922929 (70 lb)	N/A N/A	N/A N/A
		Long/Short Casing Thread		N/A N/A	N/A N/A	052092220 (80 lb)
	Flanged End	RTJ		O/A O/A	O/A O/A	N/A N/A
	Weld End	SCH 80	1	O/A	O/A	N/A
		SCH XXH	2	O/A	O/A	N/A
		SCH 160	5	O/A	O/A	N/A
	Grooved End	SCH 80	N/A	O/A	O/A	N/A
20	Bonnet Stud (2 Required) A-320-L7 Steel	Each		WWHS1S2S6 (1.5 lb)	WWHS1W3H6 (1.5 lb)	
21	Bonnet Stud Nut (2 Required) A-320-L7 Steel	Each		WWJA1S10Z (0.5 lb)	WWJA1W10Z (0.5 lb)	
22	Body Stud (4 Required) A-320-L7 Steel	Each		WWHS203H6 (2 lb)	WWHS284H6 (2 lb)	
23	Body Stud Nut (4 Required) A-320-L7 Steel	Each		WWJA2010Z (1 lb)	WWJA2810Z (1 lb)	
24	Bleeder Plug			N/A N/A	N/A N/A	WWS120HFS (1 lb)

N/A = Not Available.; O/A = On Application; Bleeder Plug not shown. Refer to page 16 for product illustration.

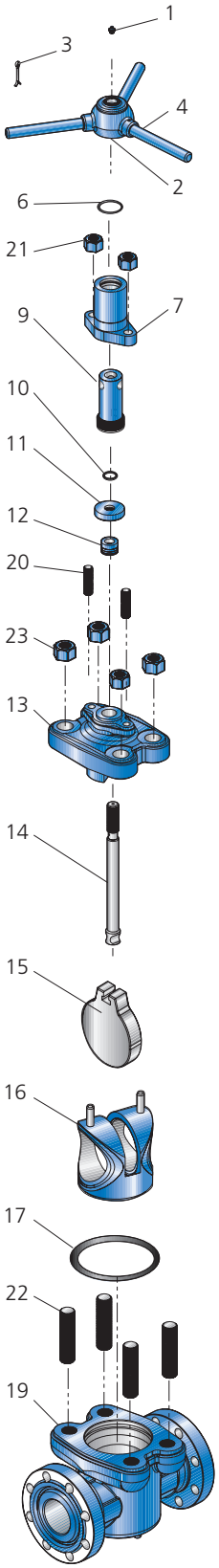

PARTS AND WEIGHTS

3 inch - 5000 WP

Item No.	Description			3 inch 5000 WP
1	Lube Fitting Steel			WWW00C000 (0.1 lb)
2	Hub Assembly Steel			051888100 (7.5 lb)
3	Pin, Lock Handle Steel			WWLC16204 (0.1 lb)
4	Lock Handle Steel			051888500 (2 lb)
6	Stem Screw Seal	70 D Buna-N	H30	WWB226XXX (0.1 lb)
		75 D Viton®	V35	
7	Screw Housing Steel			051884000 (5 lb)
9	Stem Screw Steel			051883900 (3 lb)
10	Secondary Seal	90 D Buna-N	H30	WWB212XXX (0.2 lb)
		90 D Viton®	V40	
11	Retainer Steel			051883800 (0.5 lb)
12	Stem Seal Assembly			105312732 (0.5 lb)
13	Bonnet (A-487 Steel)			052068639
14	Stem 316 SS			051818708 (2 lb)
15	Gate 316 SS			051818808 (5 lb)
16	Seat Steel	70 D Buna-N	21	0518206XX (6 lb)
	316 SS	70 D Buna-N	81	(6 lb)
		90 D Viton®	82	(6 lb)
		90 DPC	86	(6 lb)
17	Bonnet Seal	90 D Buna-N	H40	WWB433XXX (0.2 lb)
		90 D Viton®	V40	(0.2 lb)
		90 DPC	P41	(0.2 lb)
19	Body Screwed End	Uncoated Steel LP		051884839 (74 lb)
		NUE		051885439 (74 lb)
		EUE		N/A
	Flanged End	RTJ		051887839 (110 lb)
	Weld End	SCH 80	1	0518866X9 O/A
		SCH XXH	2	(73 lb)
		SCH 160	5	(73 lb)
	Grooved End	SCH 80		N/A N/A
20	Bonnet Stud (2 Required) A-320-L7 Steel	Each		WWHS1S2S6 (1.5 lb)
21	Bonnet Stud Nut (2 Required) A-320-L7 Steel	Each		WWJA1S10Z (0.5 lb)
22	Body Stud (4 Required) A-320-L7 Steel	Each		WWHS2D586 (3 lb)
23	Body Stud Nut (4 Required) A-320-L7 Steel	Each		WWJA2D10Z (1.5 lb)

N/A = Not Available; O/A = On Application. Refer to page 16 for product illustration.

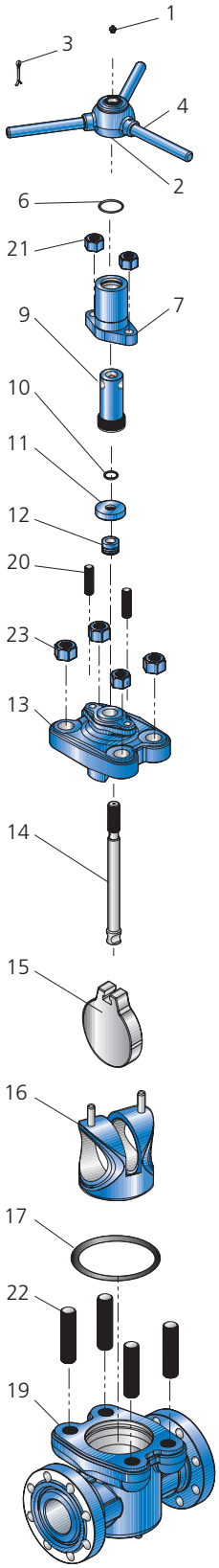

PARTS AND WEIGHTS

4 inch, 4-1/16 inch, 5x4 inch and 6x4 inch - 5000 WP

Item No.	Description			4 inch	4-1/16 inch	5 x 4 inch	6 x 4 inch
				5000 WP			
1	Lube Fitting, Steel			WWW00C000 (0.1 lb)			
2	Handle Assembly, Steel			051888300 (11 lb)			
3	Tube, Clear Acrylic			051889600 (0.2 lb)			
4	Stem Cap Ductile Iron			051889700 (2.5 lb)			
5	Key Steel			WWW00A000 (0.5 lb)			
6	Stem Screw Steel			051883200 (5 lb)			
7	Stem Screw Seal			WWB226XXX			
	Steel	70 D Buna-N	H30	(0.1 lb)			
		75 D Viton®	V35	(0.1 lb)			
8	Screw Housing, Steel			051883400 (8 lb)			
9	Stem 316 SS			051820208 (3 lb)			
10	Secondary Seal			WWB214XXX			
		90 D Buna-N	H30	(0.2 lb)			
		90 D Viton®	V40	(0.2 lb)			
11	Retainer Steel			051882800 (1 lb)			
12	Stem Seal Assembly			105312742 (0.5 lb)			
13	Bearing (2 Required) Teflon®/Phenolic	Each		051883000 (0.1 lb)			
14	Down Stop Ring, 303SS			051882900 (0.5 lb)			
16	Bonnet (A-487 Steel)			052096729 (61 lb) (63 lb) (65 lb) (68 lb)	051889539 (61 lb) (63 lb) (65 lb) (68 lb)	052096729 (61 lb) (63 lb) (65 lb) (68 lb)	
18	Bonnet Seal			WWB439XXX			
		90 D Buna-N	H40	(0.2 lb)			
		90 D Viton®	V40	(0.2 lb)			
		90 DPC	P41	(0.2 lb)			
19	Gate 316 SS			051820108 (9 lb)			
20	Body Screwed End	Uncoated Steel LP		051884939 (130 lb)	N/A –	N/A –	N/A –
		NUE		051885539 (130 lb)	N/A –	N/A –	N/A –
		Long/Short Casing Thread		N/A –	052098220 –	N/A –	
	Flanged End	RTJ		051887939 (230 lb)	N/A –	051964239 (485 lb)	N/A –
	Weld End			0520763X9	N/A	0519994X9	0519310X9
		SCH XXH	2	(134 lb)	–	(134 lb)	(134 lb)
		SCH 160	5	(132 lb)	–	(132 lb)	(132 lb)
21	Seat			0518205XX	052092521	0518205XX	
	Steel	70 D Buna-N	21	(8 lb)	(8 lb)	(8 lb)	
	316 SS	70 D Buna-N	81	(8 lb)	(8 lb)	(8 lb)	
		90 D Viton®	82	(8 lb)	(8 lb)	(8 lb)	
		90 DPC	86	(8 lb)	(8 lb)	(8 lb)	
23	Bonnet Stud (2 Required) A-320-L7 Steel	Each		WWHS1W3H6 (1.5 lb)			
24	Bonnet Stud Nut (2 Required) A-320-L7 Steel	Each		WWJA1W10Z (0.5 lb)			
25	Body Stud (4 Required) A-320-L7 Steel	Each		WWHS2S606 (4 lb)			
26	Body Stud Nut (4 Required) A-320-L7 Steel	Each		WWJA2S10Z (2 lb)			
27	Bleeder Plug *			N/A N/A	WWS120HFS (1.0 lb)	N/A N/A	N/A N/A

N/A = Not Available; *Bleeder Plug not shown.

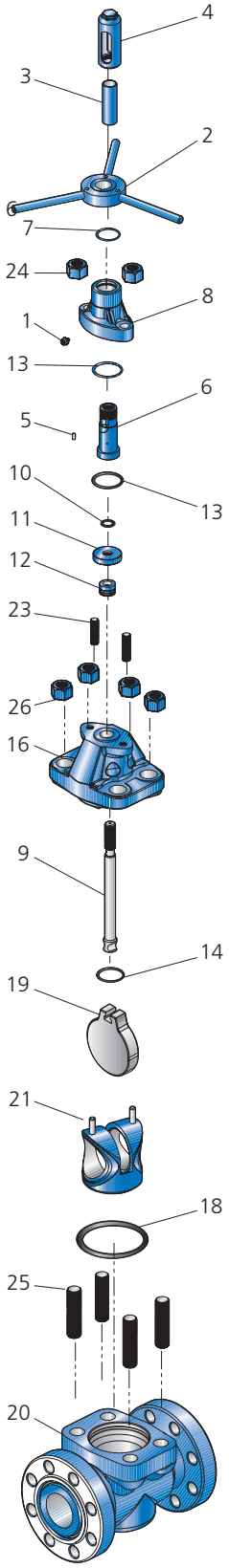

MATERIALS SPECIFICATIONS

Item	2000/3000/5000 WP 2 inch, 3 inch, 4 inch, 4-1/16 inch, 5 x 4 inch and 6 x 4 inch
Body	
Screwed/Grooved	A-487 Cast Steel
Weld	A-487 Cast Steel
Flanged	A-487 Cast Steel
Bonnet	A-487 Cast Steel
Coupling	A-487 Cast Steel
Stem	316 Stainless Steel
Seat	
Elastomer	70 Durometer A Buna-N
Insert	A-216 Cast Steel
Gate	316 Stainless Steel
Studs	A-320-L7 Steel
Nuts	A-320-L7 Steel

Optional Trims	
Seat	
Elastomer	90 Durometer A Peroxide Cured Buna-N or 90 Durometer A Fluoroelastomer
Insert	316 Stainless Steel
Studs	A-193-B7M
Nuts	A-194-2HM Steel

ELASTOMER PROPERTIES AND SELECTION

Properties		Base Elastomer			
		NBR		Fluoroelastomer	HSN
Durometer A		70PC	90PC	90	85
Temperature Range, Fahrenheit	High	+225	+225	+400	+300
	Low	-30	0	-20	-25
Hydrogen Sulfide, H2S	Hot	Poor	Fair	Good	Best
	Cold	Fair	Fair	Good	Best
Carbon Dioxide, CO2	Wet	Fair	Good	Fair	Best
	Dry	Fair	Good	Fair	Best
Dilute Acidics		Good	Good	Good	Good
Dilute Caustics		Fair	Fair	Good	Good
Sour Oil and Gas		C/E	C/E	C/E	C/E
Salt Water		Best	Good	Good	Good
Oil		Best	Good	Good	Good
Sweet Gas		Good	Best	Good	Good

C/E - Consult Engineering.
PC - Peroxide Cured.

DIMENSIONS AND PRESSURE RATING 7500 WP

Dim	Pressure Rating	7500 WP and 11250 WP Test					
	Size	2 x 3	3	4	5 x 4	5-1/8	6 x 5-1/8
		inch	inch	inch	inch	inch	inch
A	Screwed End	N/A	N/A	N/A	N/A	N/A	N/A
	Weld End	11	11	13	13	N/A	18
	Flanged End	18.38	24.38	26.38	N/A	29	N/A
	Hammer Union	1502 17.87	TBD	1002 19.25	1002 23.25	N/A	TBD
B	(Open)	13	18	24-5/8	24-5/8	31-3/4	31-3/4
C	(Seat Bore)	2	3	4	4	5-1/8	5-1/8
D	(Handle Diameter)	14	19	23	23	24	24
F	(Flange Diameter)	8-1/2	10-1/2	12-1/4	14-3/4	14-1/16	N/A
	Flange Bolts (Qty)	(8)				(12)	N/A
	Size	7/8	1-1/8	1-1/4	1-1/2	1-1/8	N/A
	Ring No. (RTJ)	BX-152	BX-154	BX-155	N/A	BX-169	N/A

N/A = Not Available.
O/A = On Application.

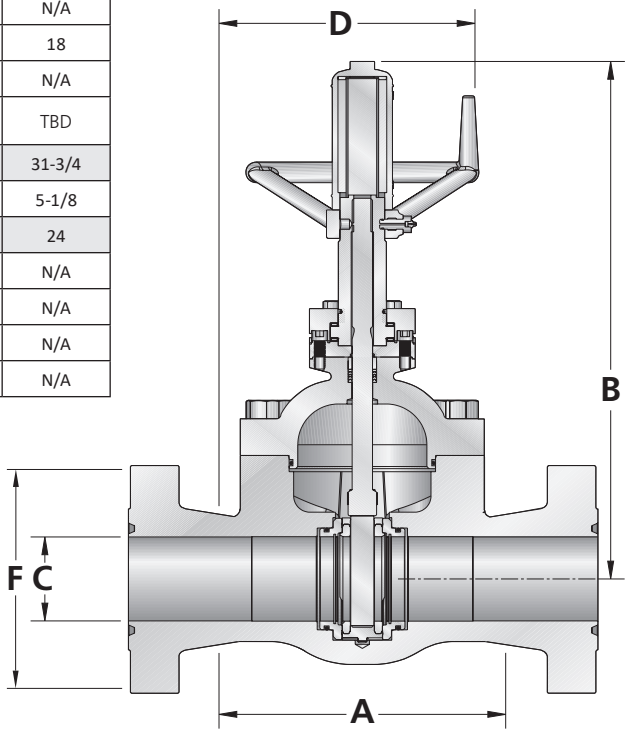

Flanged End

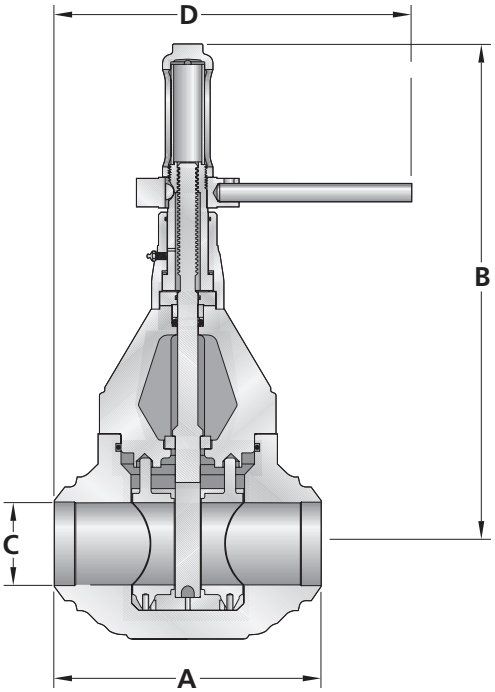

Weld-End Body

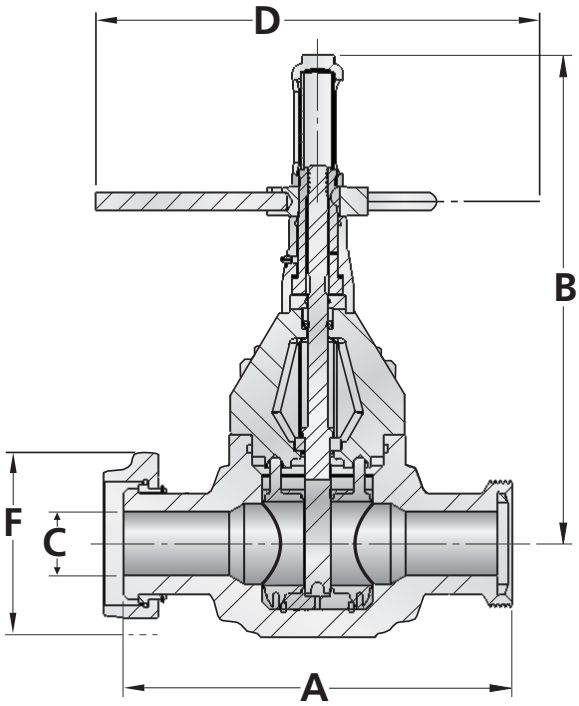

Hammer Union End

PARTS AND WEIGHTS

2 inch (2 X 3 inch), and 3 inch - 7500 WP

Item No.	Description			2 inch	3 inch
				7500 WP	
1	Lube Fitting, Steel			WWW00C000 (0.1 lb)	
2	Hub Assembly Steel			051888100 (0.5 lb)	
3	Pin, Lock Handle, Steel			WWLC16204 (0.1 lb)	
4	Lock Handle ,Steel			051888500 (1.5 lb)	
6	Stem Screw Seal, Buna-N			WWB226H30 (0.1 lb)	
7	Screw Housing, Steel			051884000 (5 lb)	
9	Stem Screw, Steel			051883900 (3 lb)	
10	Secondary Seal, Buna-N			WWB212H30 (0.2 lb)	
11	Retainer, Steel			051883800 (0.5 lb)	
12	Stem Seal Assembly			105312732 (0.5 lb)	
13	Bonnet (A487-4D Steel)	Uncoated Steel		052068639 (20 lb)	
14	Stem, 316 SS			051818708 (2 lb)	
15	Gate, 17-4PH 316 SS with Tungsten Carbide Coating			05188890 (5 lb) 051997609 (5 lb)	
16	Seat, Steel	85NBR	SS	1021570	
		HSN	SS	1024578	
		Viton®	SS	1024660	
17	Bonnet Seal			WWB433XXX	
		Buna-N	H40	(0.2 lb)	
		Viton®	V35	(0.2 lb)	
		90 DPC	P41	(0.2 lb)	
19	Body Weld End	Uncoated Steel			
		SCH XXH		052068829 (73 lb)	051886629 (73 lb)
	RTJ Flange			052144529 (129 lb)	052132029 (206 lb)
20	Bonnet Stud (2 Required) A-320-L7 Steel	Each		WWHS1S2S6 (0.5 lb)	
21	Bonnet Stud Nut (2 Required) A-320-L7 Steel	Each		WWJA1S10Z (0.5 lb)	
22	Body Stud (4 Required) A-320-L7 Steel	Each		WWHS2D586 (1.5 lb)	
23	Bonnet Stud Nut (4 Required) A-320-L7 Steel	Each		WWJA2D10Z (1.5 lb)	

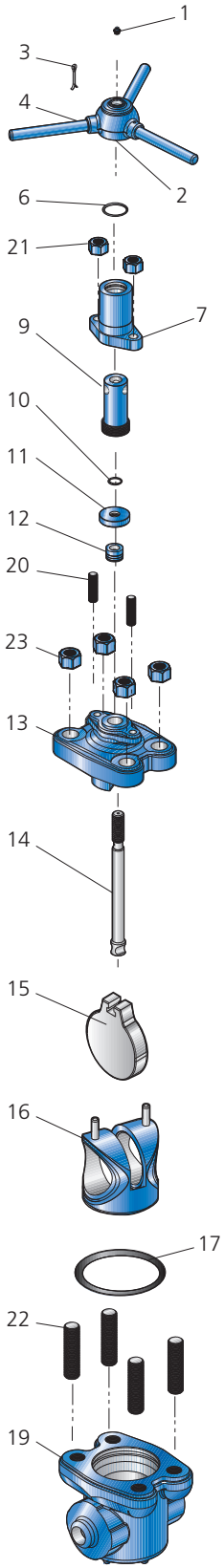

PARTS AND WEIGHTS

4 inch and 5 X 4 inch - 7500 WP

Item No.	Description			4 inch	5 x 4 inch
				7500 WP	
1	Lube Fitting, Steel			WWW00C000 (0.1 lb)	
2	Handle Assembly, Steel			051888300 (0.5 lb)	
3	Tube, Clear Acrylic			051889600 (0.2 lb)	
4	Stem Cap, Ductile Iron			051889700 (2.5 lb)	
5	Key, Steel			WWW00A000 (0.5 lb)	
6	Stem Screw, Steel			051883200 (5 lb)	
7	Stem Screw Seal			WWB226H30	
		70 D Buna-N	H30	(0.1 lb)	
		70 D Viton®	V40	(0.1 lb)	
8	Screw Housing, Steel			051883400 (8 lb)	
9	Stem, 316 Stainless Steel			051820208 (3 lb)	
10	Secondary Seal			WWB214H40	
		90 D Buna-N	H40	(0.2 lb)	
		90 D Viton®	V40	(0.2 lb)	
11	Retainer, Steel			051882800 (1 lb)	
12	Stem Seal Assembly			105312742	
13	Bearing (2 Required)			051883000	
	Teflon®/Phenolic	Each		(0.1 lb)	
14	Down Stop Ring, 303 Stainless Steel			051882900 (0.5 lb)	
16	Bonnet (A-487 Steel)	Uncoated Steel		051889539 (61 lb)	
18	Bonnet Seal			WWB439XXX	
		90 D Buna-N	H40	(0.2 lb)	
		98 D Viton®	V40	(0.2 lb)	
		90 DPC	P41	(0.2 lb)	
19	Gate				
	17-4PH			051997709	
				(9 lb)	
	316 Stainless Steel with Tungsten			052076609	
	Carbide Coatings			(9 lb)	
20	Body	Uncoated Steel			
	Weld	SCH XXH		052076329	051999429
				(134 lb)	(134 lb)
21		85NBR	SS	1021591	
	Seat, Steel	HSN	SS	1024613	
		Viton®	SS	1024614	
23	Bonnet Stud (2 Required)			WWHS1W3H6	
	A-320-L7 Steel	Each		(1.5 lb)	
24	Bonnet Stud Nut (2 Required)			WWJA1W10Z	
	A-320-L7 Steel	Each		(1.5 lb)	
25	Body Stud (4 Required)			WWHS2S606	
	A-320-L7 Steel	Each		(0.5 lb)	
26	Body Stud Nut (4 Required)			WWJA2S10Z (2 lb)	

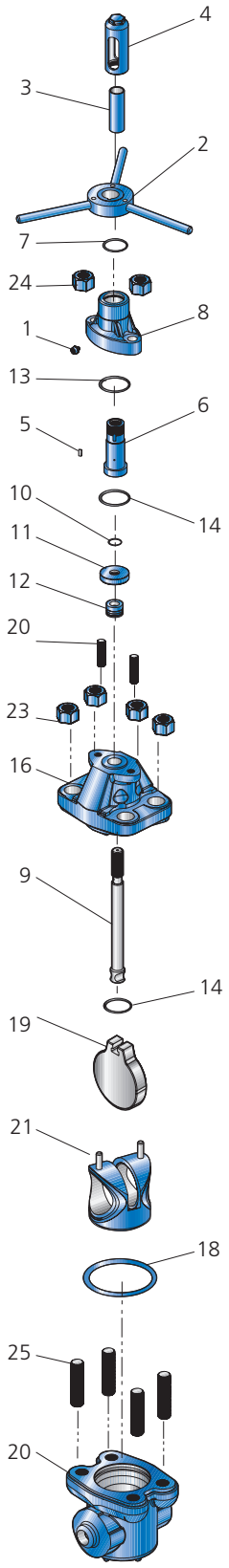

PARTS AND WEIGHTS

5-1/8 inch and 6 X 5-1/8 inch - 7500 WP

Item No.	Description			5-1/8 inch	6 x 5-1/8 inch
				7500 WP	
1	Body Steel			052114229 Flanged 543	052114129 XXH 280
2	Seat	NBR90	SS	1021363	
		HSN90	SS	1024681	
		Viton®	SS	1024682	
3	Wear Ring Alloy Steel/Nickel Coat			052115100 (5 lb)	
4	O-ring Seal, Buna-N	90 DPC		WWB435P41 (0.10 lb)	
5	Gate, 17-4 PH			052115290 (20 lb)	
6	Gate Clip, Stainless Steel			052115700 (0.10 lb)	
7	Stem, 410 Stainless Steel			052115400 (7 lb)	
8	Bonnet Seal			WWB446XXX	
		90 D Buna-N	P41	(0.1 lb)	
		90 D Viton®	V40	(0.1 lb)	
9	Bonnet (A-487 Steel) Coatings:	None		052114029 (113 lb)	
10 Thru 14	Stem Seal Assembly			052191152	
15	O-ring Seal			WWB218XXX	
		90 DPC	P41	(0.10 lb)	
		90 D Viton®	V40	(0.10 lb)	
16	Body Stud A-320-L7 Steel	(12 Required)		WWHS24506 (1.25 lb)	
17	Body Stud Nut A-194-7L Steel	(12 Required)		WWJB2440Z (0.55 lb)	
18	Packing Retainer, Steel			052115500 (7.5 lb)	
19	Thrust Washer, Steel	(4 Required)		WWEAS5710 (0.5 lb)	
20	Needle Thrust Bearing, Steel	(2 Required)		WWEAXK751 (0.15 lb)	
21	Screw Housing, Steel			052115600 (14 lb)	
22	Socket Hex Head Cap Screw	(4 Required)		WWG11M1S0 (.20 lb)	
23	O-ring Seal			WWB334H30 (.10 lb)	
24	Lube Fitting, Steel			WWW00C000 (0.1 lb)	
25	Bonnet Cap, Steel			052115900 (11.5 lb)	
26	Bonnet Hex Head Cap Screw A-194-2H Steel	(4 Required) Each		WWG31S508 (.20 lb)	
27	Handwheel Locking Screw			052115000 (.25 lb)	
28	O-ring Seal			WWB111H30 (.10 lb)	
29	Handwheel, Steel			0521145B0 (26 lb)	
30	Tube, Clear Acrylic			052114900 (.25 lb)	
31	Stem Cap, Carbon Steel			0521148B0 (8 lb)	

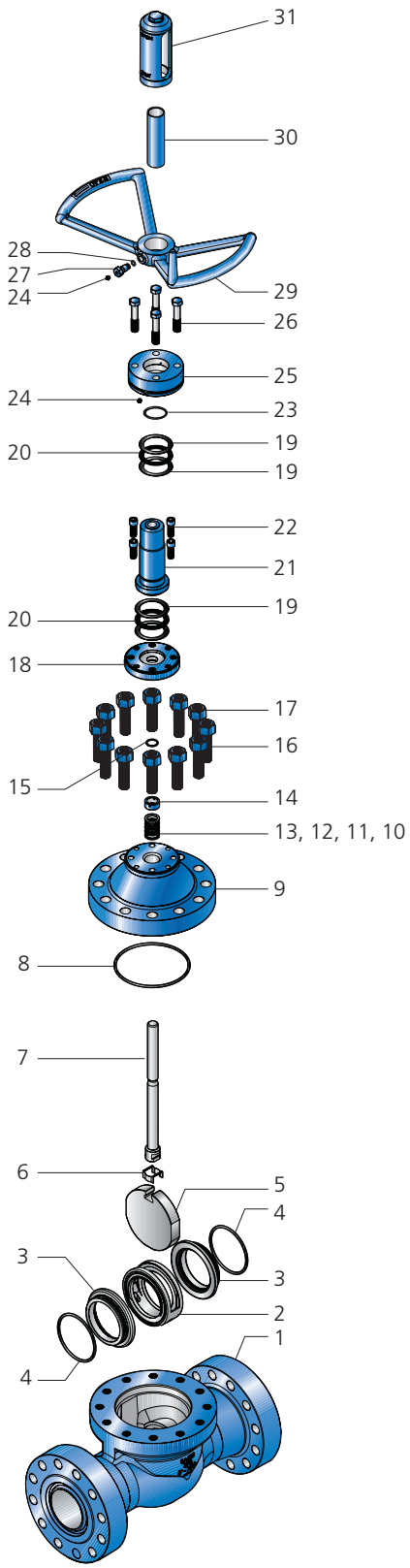

REPAIR INSTRUCTIONS
2 inch - 3000 WP and 5000 WP Gate Valve

TOOLS REQUIRED FOR ASSEMBLY

- Hammer and mandrel or metal bar
- Drill and #44 bit
- Adjustable pipe wrench
- Torque, impact or socket wrench and socket
- Grease gun and grease, molybdenum disulfide base
- Grinder with flapper wheel
- Pressure test facility and fixtures
- 5/16 in. Nut Driver
- Vise Grips

Assembly Procedures

a. Slide the threaded end of the Stem (14) through the Bonnet Bore (13), from the underside and place the Stem Seal Assembly (12) over the Stem. This assembly consists of the Seal Rings, a flat-backed follower ring and a Bushing, which are placed over the end of the Stem in that order. Slide the Retainer (11) with an O-ring Seal (10) in- side, over the Stem. Observe that the lips of the O-ring Seal do not get curled back. Seat the Stem Seal Assembly into its counter bore in the Bonnet.

b. Engage the Stem Screw (9) in the Screw Housing (7) about half its total travel and place the Screw Housing on the Bonnet and Stem.

c. Using vice grips, attach to Tee-Head of Stem, then rotate clockwise until Stem is above lugs so the gate can be attached. Remove vice grips and attach gate to Tee-Head. Rotate the gate to the opening between the lugs. Place the assembly on its side with the lock set screw facing up and using the lock set screw as a marker, turn counter clock- wise three times at 360° each.

d. Install lock screw, tighten, and then install the seat onto the gate. Install the Bonnet seal and Item No. pin into the body. Grease the outside of the seat and the inside of the body. Install the Bonnet assembly into the body. Install the coupling over the Bonnet and tighten onto the body with a pipe wrench. Install the handle hub on the Stem Screw and insert the lock handle retainer lock with the lock handle pin. Do not spread the cotter pin at this time. Close the gate valve until the hub is resting on the top of the Screw Housing. At this point, mark the gate with a pencil at the bottom of the seat bore. Raise the bottom of the gate by turning the handle counter clockwise until half open. Measure the mark on the gate to verify the gate is fully down at 5/16 in. to 7/16 in. If the distance is correct, then fully open the gate valve, spread the cotter and insert the drift bar pin. If correct, go to step F.

e. If not correct, then remove the handle and coupling from Bonnet assembly. Remove Bonnet assembly from the body. Remove the lock screw from the Stem Screw Housing and adjust the timing by rotating the Stem Screw clockwise to increase distances or counter clockwise to decrease distances. Repeat step D.

f. When the Baker Mud Gate Valve is assembled in the manner described, the Hub is stopped by the Screw Housing at the proper down position of the Gate. By this design, over tightening is impossible and maximum sealing efficiency is assured.

REPAIR INSTRUCTIONS

3 inch, 4 inch, and 4-1/16 inch - 3000 WP and 3 inch - 5000 WP Gate Valve

Tools Required for Assembly

- Hammer and mandrel or metal bar
- Drill with #44 Drill Bit
- API adjustable pipe wrench
- Torque, impact or socket wrench and socket
- Screwdriver
- Pressure test facility and fixtures
- Grease gun and grease, molybdenum disulfide base
- Grinder with flapper wheel
- 5/16 in. Nut Driver
- Vise Grips

Assembly Procedures

a. Slide the threaded end of the Stem (14) through the Bonnet Bore (13) from the underside and place the Stem Seal Assembly (12) over the Stem. This assembly consists of the Seal Rings, a flat-backed follower Ring and a Bushing which are placed over the end of the Stem in that order. Slide the Retainer (11) with O-ring Seal (10) inside over the Stem. Observe that the lips of the Ring do not get curled back. Seat the Stem Seal Assembly into its counter bore in the Bonnet. Install Bonnet Studs (20).

b. Engage the Stem Screw (9) in the Screw Housing(7) about half [1/2] its total travel and place the Screw Housing on the Bonnet and Stem. Replace Nuts (21).

c. Rotate the Stem Screw clockwise until it bottoms on the Retainer, then back it up approximately 45 degrees. Engage the Gate (15) on the Tee-Head of the Stem and turn them together counter clock- wise until the Gate touches the underside of the Bonnet Lugs. Align the Gate with the opening be- tween the Lugs and retract it into the Bonnet by turning the Stem Screw counter clockwise. Place the Hub (2) on the Stem Screw, insert the Lock Handle (4), and retain it with the Lock Handle Pin (3).

Assembly and Timing Procedures

d. Install the Seat (16) onto the Gate and grease the outside of the seat. Install Body Studs and Bonnet Seal, then grease the inside of the Body. Install the Bonnet assembly into the Body. Place Stud Nuts and tighten per appropriate torque. Close the gate fully by turning the handle clockwise. Make sure the Hub Assembly sits flush on the Screw Housing. Also, make pencil marks on the Gate even with the bottom of the Seat Bore. Open the gate by turning the handle counter clockwise and measure distance from mark to the bottom of the Gate. This distance should fall within the following limits for each valve size:

3 in.	**4 in.**
3/8 in. - 1/2 in.	7/16 in. - 9/16 in.

If either the distance is not correct, or the Hub is not flush with the Screw Housing, open the gate fully, loosen the Bonnet Stud Nuts and remove. Turn the handle clockwise while raising the Stem Screw Assembly above the Bonnet Studs. Turn the Stem Screw assembly clockwise or counter clockwise, as appropriate to correct timing. Turn the handle counter clockwise to lower the Stem Screw Assembly back down on the retainer. Re- place the Nuts and hand tighten. Recheck the gate timing. If still not timed, repeat timing process. If timing is correct, tighten the Bonnet Nuts to appropriate torque.

e. When the Forum Gate Valve is assembled in the manner described, the Hub is stopped by the Screw Housing at the proper down position of the Gate. By this design, over tightening is impossible and maximum sealing efficiency is assured.

Stud Diameter inch	Torque ft-lbf
1/2	60
5/8	89
3/4	107
7/8	162
1	244
1-1/8	322
1-1/4	410
1-3/8	510
1-1/2	615

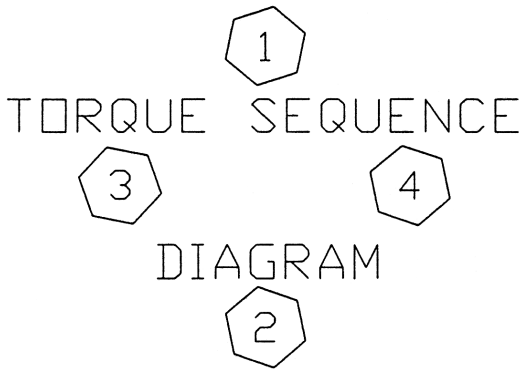

REPAIR INSTRUCTIONS

4 inch, 4-1/16 inch, 5 X 4 inch, and 6 X 4 inch - 5000 WP Gate Valve

Tools Required for Assembly

- Hammer and mandrel or metal bar
- Drill with #44 Drill Bit
- Adjustable pipe wrench
- Torque, impact or socket wrench and socket
- Screwdriver
- Pressure test facility and fixtures
- Grease gun and grease, molybdenum disulfide base
- Grinder with flapper wheel
- 5/16 in. Nut Driver
- Vise Grips

Assembly Procedures

a. Slide the threaded end of the Stem (9) through the Bonnet Bore (16), from the underside and draw the Stem Head part way up into the Bonnet. Put the Down Stop Ring (14) over the bottom of the Stem Head. Lower the Stem so that the Down Stop Ring shoulders on the inside of the Bonnet and slide the Gate (19) onto the Tee-Head of the Stem.

b. Place the Stem Seal Assembly (12) over the Stem. This assembly consists of three [3] Seal Rings, a flat backed follower ring and a Bushing which are placed over the end of the Stem in that order. Carefully work down the Seal and follower over the Stem threads. Observe that the lips of the ring do not get curled back. After the Bushing, place the Retainer (11) with O-ring Seal (10) down over the Stem with flat side up.

c. Follow the Retainer with a Bearing (13) and the Stem Screw (6). Note that the Bearing must be concentric with the Stem Screw before further assembly. It can be held in place by turning the Stem Screw counter clockwise until the Stem Head seats against the Bonnet. Place another Bearing down over the Stem Screw and follow it with the Screw Housing (8), with O-ring Seal (7) inside, and tighten Nuts (24). Place the Key (5) into its slot in the Stem Screw and replace the Handle (2), Tube (3), and Stem Cap (4) in that order.

d. Slide the Gate (19) onto the Stem, turn it one quarter of a turn, to line it up with the slot in the Bonnet and draw it up all the way into the Bonnet by turning the Handle counter clockwise. Replace the Bonnet Seal (18) and install Seat and Bonnet Assembly in the body. Tighten Nuts (26) per torque requirement, and repack the Screw Housing (8) with general purpose grease through Fitting (1).

Stud Diameter	Torque
inch	ft-lbf
1/2	60
5/8	89
3/4	107
7/8	162
1	244
1-1/8	322
1-1/4	410
1-3/8	510
1-1/2	615
1-3/4	830

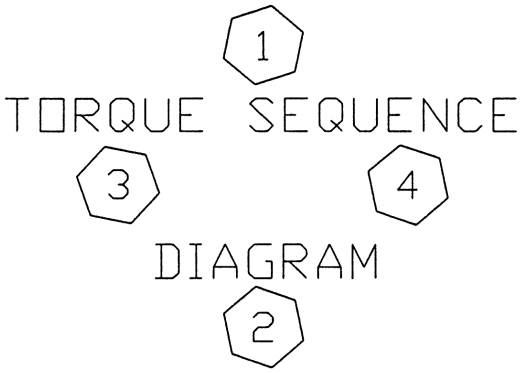

REPAIR INSTRUCTIONS
2 inch (2 X 3 inch), and 3 inch - 7500 WP Gate Valve

Tools Required for Assembly

- Hammer and mandrel or metal bar
- Drill with #44 Drill Bit
- API adjustable pipe wrench
- Torque, impact or socket wrench and socket
- Screwdriver
- Pressure test facility and fixtures
- Grease gun and grease, molybdenum disulfide base
- Grinder with flapper wheel
- 5/16 in. Nut Driver
- Vise Grips

Assembly Procedures

a. Slide the threaded end of the Stem (14) through the Bonnet Bore from the underside and place the Stem Seal Assembly (12) over the Stem. This assembly consists of the Seal Rings, a flat-backed fol- lower Ring, and a Bushing which are placed over the end of the Stem in that order. Slide the Retainer (11) with O-ring Seal (10) inside of the Stem. Ob- serve that the lips of the ring do not get curled back. Set the Stem Seal Assembly into its counterbore in the Bonnet. Install Bonnet Studs (20).

b. Engage the Stem Screw (9) in the Screw Housing (7) about half (1/2) its total travel and place the Screw Housing on the Bonnet and Stem. Replace Nuts (21).

c. Rotate the Stem Screw clockwise until it bottoms on the Retainer, then back it up approximately 45 degrees. Engage the Gate (15) on the Tee-Head of the Stem and turn them together counter clockwise until the Gate touches the underside of the Bonnet Lugs. Align the Gate with the opening between the Lugs and retract it into the Bonnet by turning the Stem Screw counter clockwise. Place the Hub (2) on the Stem Screw, insert the Lock Handle (4), and retain it with the Lock Handle Pin (3).

Stud Diameter	Torque
inch	ft-lbf
1/2	60
5/8	89
3/4	107
7/8	162
1	244
1-1/8	322
1-1/4	410
1-3/8	510
1-1/2	615

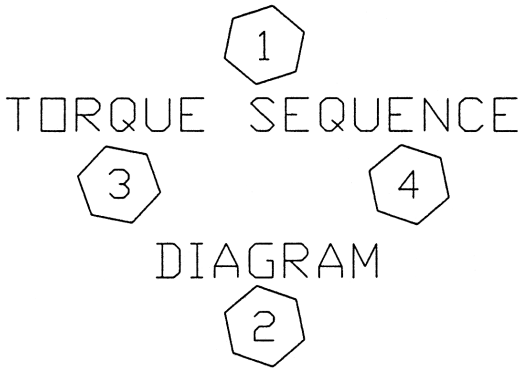

Assembly amd Timing Procedures

d. Install the Seat (16) onto the Gate and grease the outside of the Seat. Install Body Studs and Bonnet on Seat and Valve Body, then lubricate the inside of the Body.

Note: Use a mixture of 25% Dixon #635 Lubrication Flake Graphite and 75% 10 weight oil for lubrication on Seat and Valve Body Bore prior to installing Seat into Body).

e. Install the bonnet assembly into the Body. Replace Body Nut and tighten per appropriate torque. Close the Gate fully by turning the handle clockwise. Make sure the Hub sits flush on the Screw Housing. Also, make pencil marks on the Gate even with the bottom of the Seat Bore. Open the Gate by turning the handle counter clockwise and measure distance from mark to the bottom of the Gate. This distance should fall within the following limits: (3/8 in. - 1/2 in.)

f. If either the distance is off, or the Hub is not flush with the Screw Housing, open the Gate fully, loosen the Bonnet Nut and remove. Turn the handle clock- wise while raising the Stem Screw Assembly above the Bonnet Studs. Turn the Stem Screw Assembly clockwise or counter clockwise, as appropriate to correct timing. Turn the handle counter clockwise to lower the Stem Screw Assembly back down on the Retainer. Replace the Nuts and hand tighten, re- check the gate timing. If still not timed, repeat timing process. If timing is correct, tighten the bonnet nuts to appropriate torque and forward to the testing area.

g. When the Forum Gate Valve is assembled in the manner described, the Hub is stopped by the Screw Housing at the proper down position of the Gate. By this design, overtightening is impossible and maxi- mum sealing efficiency is assured.

REPAIR INSTRUCTIONS
4 inch and 5 X 4 inch - 7500 WP Gate Valve

Tools Required for Assembly

- Hammer and mandrel or metal bar
- Drill with #44 Drill Bit
- Adjustable pipe wrench
- Torque, impact or socket wrench and socket
- Grease gun and grease, molybdenum disulfide base
- Grinder with flapper wheel
- Pressure test facility and fixtures
- 5/16 in. Nut Driver
- Vise Grips
- Screwdriver

Assembly Procedures

a. Slide the threaded end of the Stem (9) through the Bonnet (16) bore, from the underside of the Bonnet, until the Tee Slot on the Stem is half way into the Bonnet Cavity.

b. Slide the Down Stop Ring (14) over the Tee Slot of the Stem and then lower the Stem until the Down Stop Ring shoulders on the Bonnet.

c. Slide the Gate (19) onto the Tee Slot of the Stem, align with Bonnet slot and raise the Stem/Gate assembly into the Bonnet until it tops-out.

d. Place Stem Seal Assembly (12) over the threaded part of the Stem. The assembly consists of three [3] Seal Rings, a flat-backed follower ring and a bushing.

   Note: Carefully work the seals over the Stem threads making sure the seals do not tear or curl.

e. After the bushing, place Secondary (O-ring) Seal (10) into the Retainer (11) and slide onto the Stem so that it rests on the bushing.

f. Place a Bearing (13) on top of the retainer.

g. Thread Stem Screw (6) onto the Stem until the Stem Screw bottoms-out on the bearing and the Gate is completely topped-out in the Bonnet cavity.

h. Place another bearing (13) over the Stem Screw.

i. Place Stem Screw (O-ring) Seal (7) into the Screw Housing (8). Put Screw Housing over the Stem Screw aligning on the Bonnet Studs (23).

j. Tighten Bonnet Stud Nuts (24) on the Bonnet Studs to hold the Screw Housing in place.

k. Place Key (5) into its slot in Stem Screw, put on the Handle Assembly (2), Sight Tube (3), and Stem Cap (4) in that order.

l. Lower the Gate, by turning handle clockwise, until the Stem threads show about one inch in the Sight Tube.

m. Place Bonnet Seal (18) into Body (20) Groove, and thread the Body Studs (25) into Body.

n. Liberally lubricate Gate. Spread the Seat (21) apart using the pegs and put the Seat onto the Gate.

o. Slide the Seat onto the Gate until the pegs locate into the Bonnet holes.

p. Lubricate the outside of the Seat and the inside of the Body with mixture of 25% Dixon #635 Lubricating Flake Graphite and 75% 10 Weight Oil.

q. Slide the Seat/Bonnet Assembly into the Body about one to two inches. Raise the Gate until about one inch is still in the Seat.

r. Slide the Seat completely into the Body. Make sure that the Seat is going in straight, otherwise the Seat will tear.

s. Tighten the Body Stud Nuts (26) to the required torque.

t. Lube the Stem with general purpose grease via the Lube Fitting (1).

Note: Refer to pages 28 and 29 for numbered illustration.

Stud Diameter	Torque
inch	ft-lbf
1/2	60
5/8	89
3/4	107
7/8	162
1	244
1-1/8	322
1-1/4	410
1-3/8	510
1-1/2	615
1-3/4	830

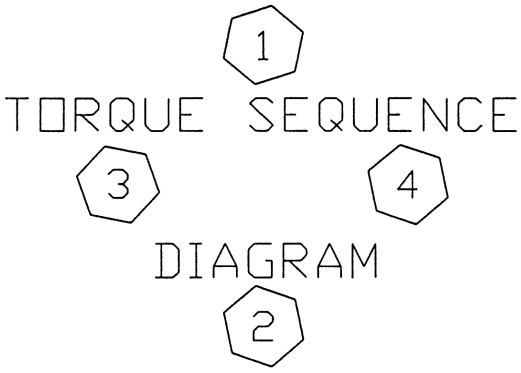

REPAIR INSTRUCTIONS
5-1/8 IN., AND 6 X 5-1/8 IN. - 7500 WP GATE VALVE

Tools Required for Assembly

- Impact wrench/torque wrench (capable of 700 ft-lbs)
- 5/8 in. Allen Wrench
- Standard shop tools
- Grease gun with grease

Assembly Procedures

a. Slide the threaded end of the Stem (7) through the bore of the Bonnet (9), opposite the stem seal bore.

b. Place the Stem Seal Assembly (10-14) over the Stem (7) and install into the stem seal bore (gland) in the Bonnet (9). Install in the following order, with the chevron side of the seals facing into the stem seal bore:
   - Bottom Adapter (10)
   - Pressure Ring (11)
   - Seal Ring (12)
   - Pressure Ring (11)
   - Top Adapter (13)
   - Gland Ring (14)

c. Install the O-ring (15) into the Packing Retainer (18) by applying grease to the O-ring groove. Install the Packing Retainer (18) over the Stem (7) and onto the Bonnet (9). Install four [4] Socket Head Cap Screws (22) and fully tighten.

d. Grease two [2] Needle Bearings (20). Place one [1] Thrust Washer (19) onto the Packing Retainer (18) followed by one [1] Needle Bearing (20) and one [1] Thrust Washer (19).

e. Place the Stem Screw Housing (21) onto the Thrust Washers (19) and Needle Bearing (20). Insert one [1] Thrust Washer (19) onto the Stem Screw Housing (21) followed by one [1] Needle Bearing (20) and one [1] Thrust Washer (19).

f. Install O-ring (23) onto the Stem Screw Housing (21). Install the Bonnet Cap (25) onto the Stem Screw Housing (21). Install four [4] Bonnet Hex Head Cap Screws (26) through the Bonnet Cap (25), Packing Retainer (18), and into the Bonnet (9). Fully tighten the Bonnet Hex Head Cap Screws (26).

g. Install the Handwheel (29) onto the Stem Screw Housing (21). Install O-ring (28) onto the Handwheel Locking Screw (27). Install the Handwheel Locking Screw (27) through the Handwheel (29) and into the Stem Screw Housing (21) and fully tighten.

h. Install the Clear Acrylic Tube (30) over the stem threads. Install the Stem Cap (31) onto the Stem Screw Housing (21) and fully tighten.

i. Install the Gate Clip (6) onto the Stem (7). Install the Gate (5) onto the Stem (7) and bend the tabs of the Gate Clip (6) down and towards the Gate (5).

j. Retract the Stem (7) until it bottoms on the Bonnet (9). Install O-ring (8) onto the Bonnet (9).

k. Install O-ring (4) onto the Wear Ring (3). Repeat for the second O-ring and wear ring. Install two [2] Wear Rings (3) into the Body (1). Install the Seat (2) into the Wear Rings (3) by collapsing the top of the Seat (2), aligning the boss on the Seat (2) with the bore in the Body (1). Release the Seat (2) and the Seat (2) will lock into place.

l. Lightly grease the Body Studs (16) and install the Body Studs (16) into the Body (1). Install the bonnet assembly onto the Body (1). Install the Body Stud Nuts (17) onto the Body Studs (16) and torque to 688 ft-lbs. Torque evenly in a criss-cross fashion.

m. Install the Lube Fittings (24). Apply grease to both fittings.

OUR CORE VALUES

No One Gets Hurt

The safety of our employees and customers is our first priority coupled with a healthy respect for the environment.

Integrity

In everything we do, in every interaction, both internally and externally, we strive to operate with the utmost integrity and mutual respect.

Customer Focused

Our products enhance our customer's performance and we listen to their needs and work with them to solve their challenges.

Good Place To Work

We are committed to creating a workplace that fosters innovation, teamwork and pride. Every team member is integral to our success and is treated equally and fairly.

FET Sales
10344 Sam Houston Park Drive, Suite 300
Houston, TX 77064

713-351-7900

f-e-t.com/drilling

ForumDP.Sales@f-e-t.com

DRL1103.10.2023